PART# E50024			
REV	DESCRIPTION	ECN	NAME DATE
–	–	–	–

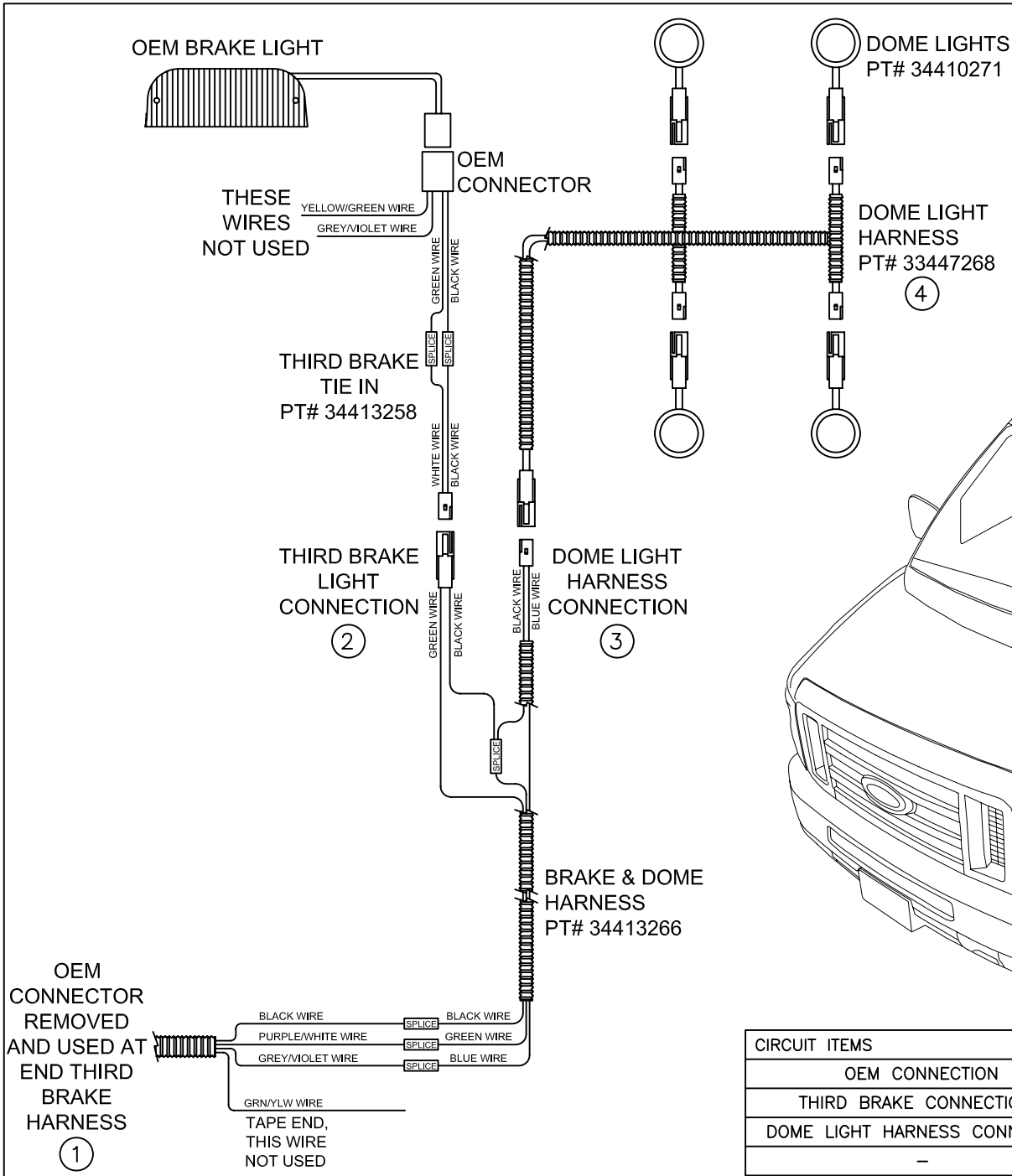

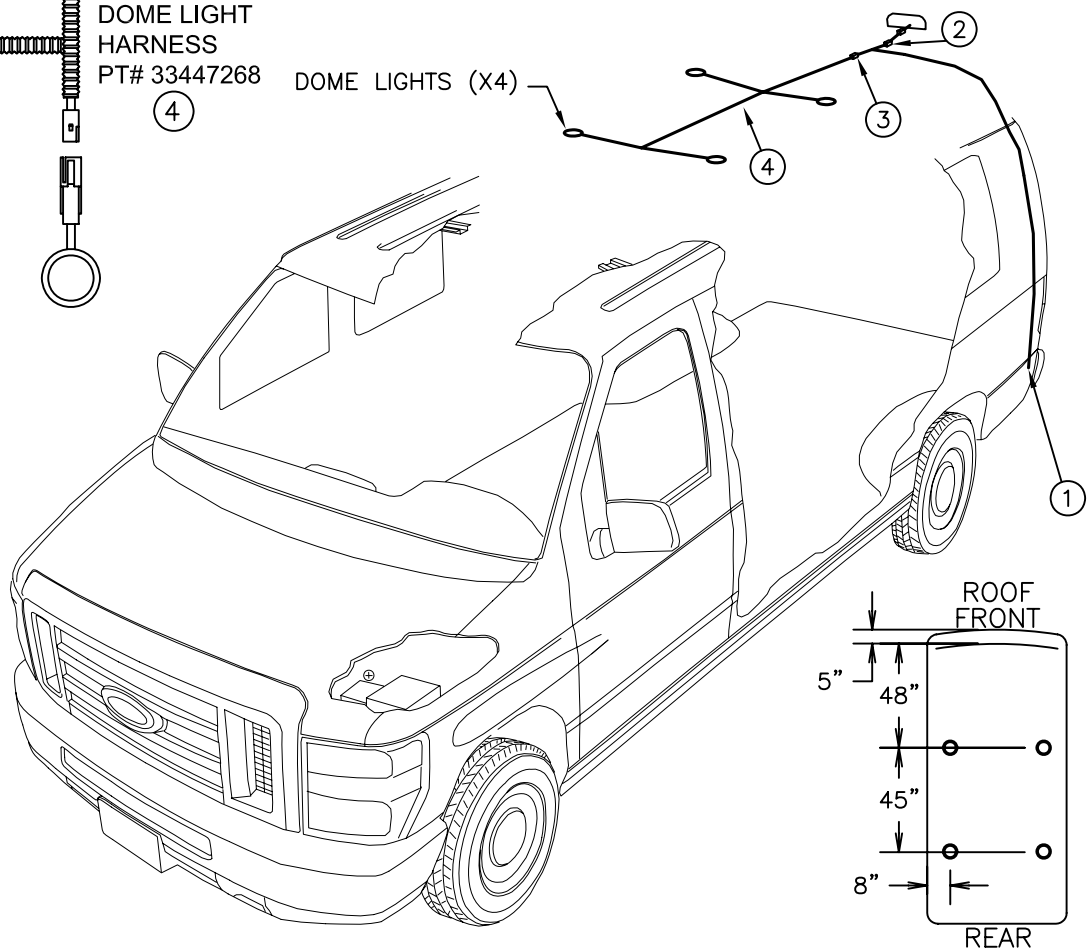

CIRCUIT ITEMS	ITEM #	QTY	WIRE SIZE/COLOR	CALC. AMP	ACTUAL AMP
OEM CONNECTION	1	1	16 GA. BLACK, GREEN, & BLUE	–	–
THIRD BRAKE CONNECTIONS	2	1	16 GA. GREEN & BLACK	–	–
DOME LIGHT HARNESS CONNECTION	3	1	16 GA. BLACK & BLUE	–	–
–	–	–	–	–	–

ACCUBUILT TUSCANY

THIS PRINT IS LOANED ON A CONFIDENTIAL BASIS SUBJECT TO RETURN UPON DEMAND BY ACCUBUILT AND NOTHING HEREIN MAY BE REPRODUCED, USED OR DISCLOSED IN WHOLE OR IN PART WITHOUT THE PRIOR WRITTEN PERMISSION OF ACCUBUILT.

TOLERANCE UNLESS NOTED
1 PLACE. . . . . ± 0.1
2 PLACE. . . . . ± 0.06
3 PLACE. . . . . ± 0.031
ANGLES . . . . . ± 1.0°

DO NOT SCALE DRAWING ALL DIMENSIONS IN INCHES UNLESS OTHERWISE NOTED.

SCALE	DATE	CHASSIS	MODEL YEAR
NTS		FORD COMMERCIAL E–SERIES	2009
DRAWN BY SDG	12/11/08	TITLE THIRD BRAKE AND DOME LIGHT LAYOUT FOR REAR RAISE DOORS	
CHECKED –	–	PART NO. E50024 / REF: –	SHEET SIZE A / SHT NO. –