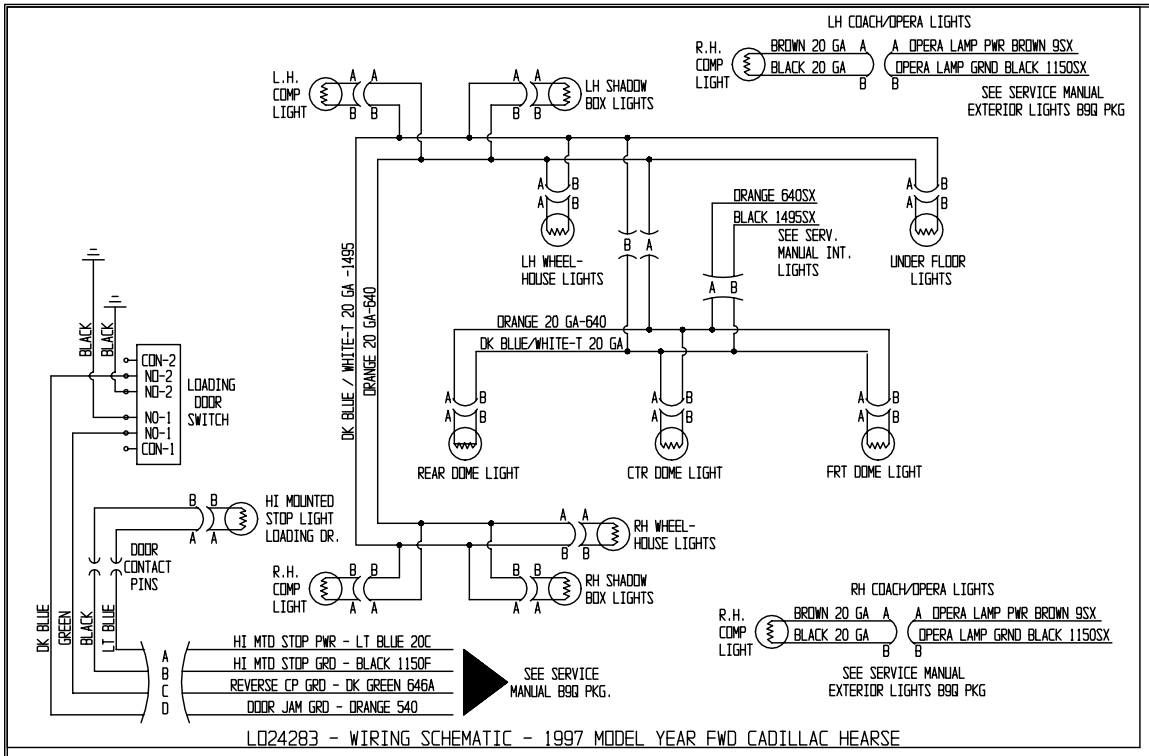

L024283 - WIRING SCHEMATIC - 1997 MODEL YEAR FWD CADILLAC HEARSE

SYM.	REVISION RECORD	DATE	DR.	CK.	APP

NO. L024283 C

REMARKS

QTY. OF FASTENERS:

FASTENER PART #:

FRAME LINE	SUB FINAL	TRIM SHOP	WELD	BOLT	NUT	WASHER	SCREW	RIVET	ADHE-SIVE
INSTALLATION AREA			INSTALLATION FASTENING METHOD						

*									
NEW PART	CHANGE REQD	USE	REWORK	SCRAP	AT ONCE	NEXT RUN	NEXT BUY	CEPD	NEW MODEL
PATTERN		STOCK DISPOSITION			EFFECTIVE				

REVISION CHANGE SYM:

PART QTY. PER CAR:

FIRST USED
ALL 1997 MODEL YEAR
FWD CADILLAC HEARSE

SCALE NONE
DATE 11/5/98
DR. S.BORN
DATE
CK.
DATE

FINISH

MATERIAL SPEC.

NAME
LAYOUT-WIRING SCHEMATIC

DISKETTE # 32Y

PART NO. L024283 C